SMART and EAGLE/HAWK

20.03.2019

Michael Schäfer, Johannes Stapf, André Ehrlich, Elena Ruiz, Manfred Wendisch

SMART

Spectral Modular Airborne Radiation Measurement System

Objectives

- **Cloud top albedo**
  - Horizontal variability
  - Cloud radiative foring
- **Verticle profiles (solar flux)**

Not during AFLUX

Dependence to cloud properites

(retrieval of cloud properties)

- Optical thickness
- Effective radius
- Cloud phase

During AFLUX only from transmition through clouds above

SMART

Spectral = spectral solar radiation

Zeiss grating spectrometers

350 – 2200 nm (2-16 nm FWHM)

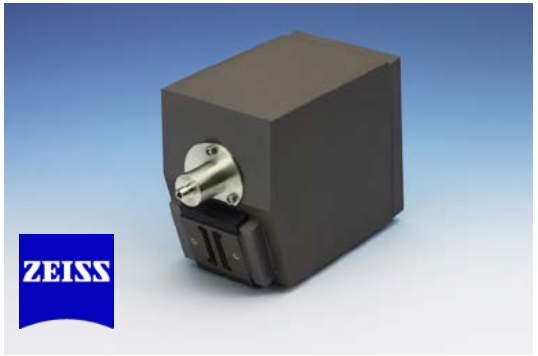

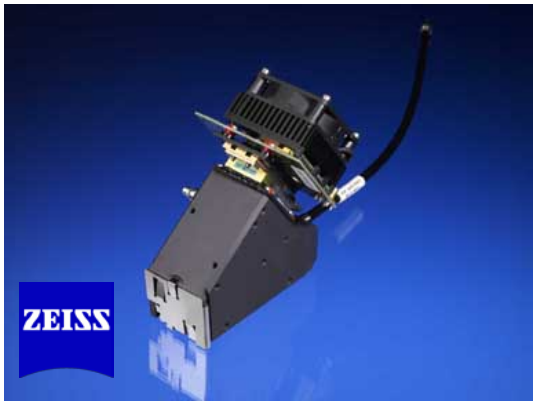

Modular = Different optical inlets

Radiance

2.1° FOV

$$I_\lambda^\downarrow$$

[W sr^{-1} m^{-2} nm^{-1}]

Irradiance

$$F_\lambda^\downarrow$$

[W m^{-2} nm^{-1}]

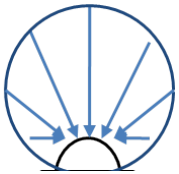

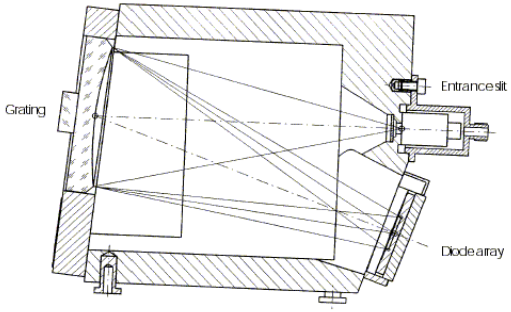

SMART

Spectral = spectral solar radiation

Zeiss grating spectrometers

350 – 2200 nm (2-16 nm FWHM)

Modular = Different optical inlets

Radiance

2.1° FOV

$I_\lambda^\downarrow$

[W sr^{-1} m^{-2} nm^{-1}]

Irradiance

$F_\lambda^\downarrow$

[W m^{-2} nm^{-1}]

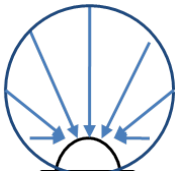

Active horizontal stabilization

EAGLE/HAWK

POLAR 5

Specim

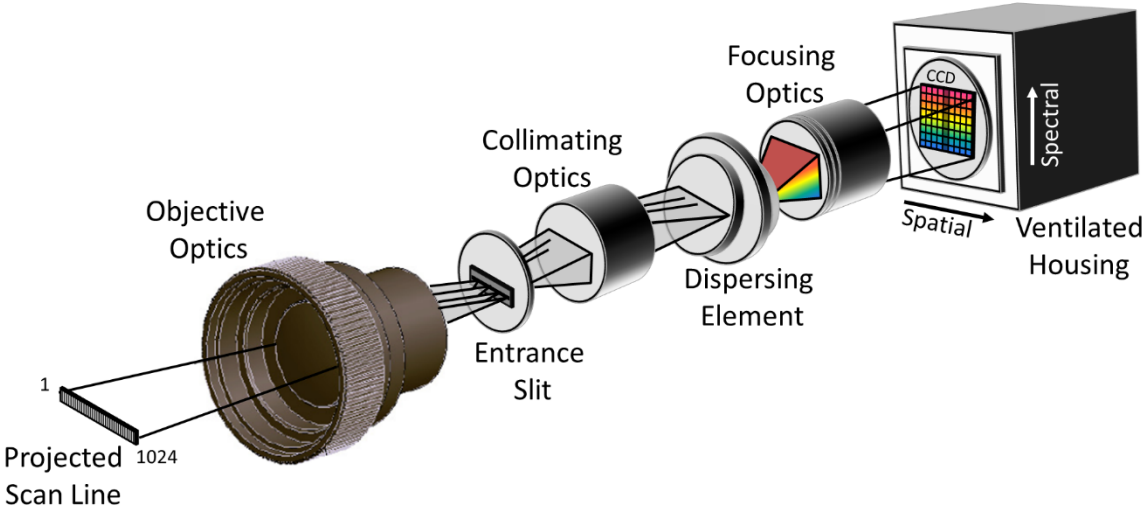
Focusing
Optics
CCD
Spectral
Collimating
Optics
Objective
Optics
Spatial
Ventilated
Housing
Dispersing
Element
Entrance
Slit
1
1024
Projected
Scan Line

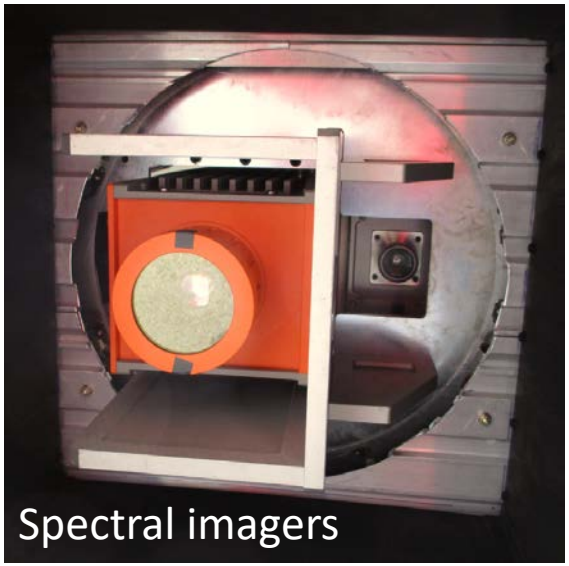
Spectral imagers

Observations – AISA Hawk

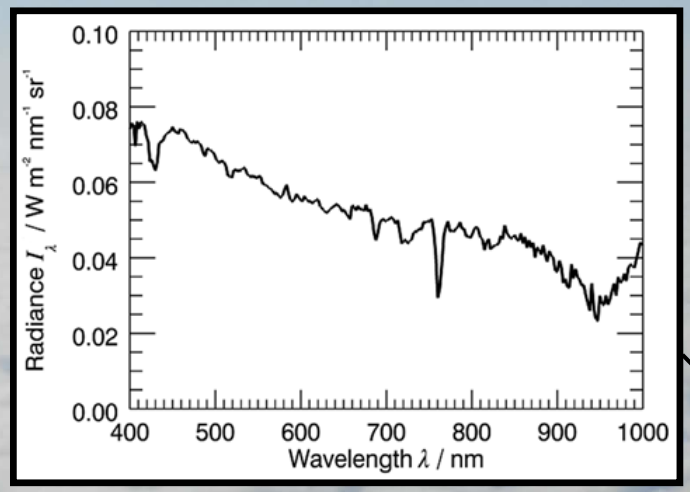

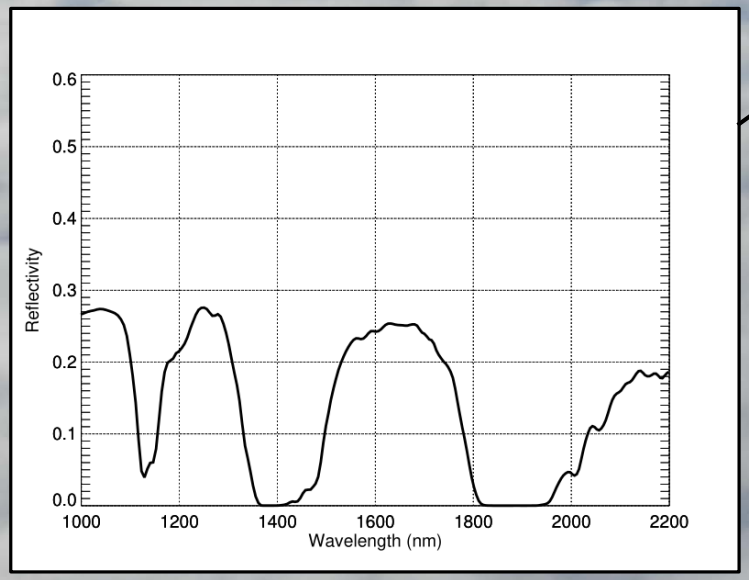

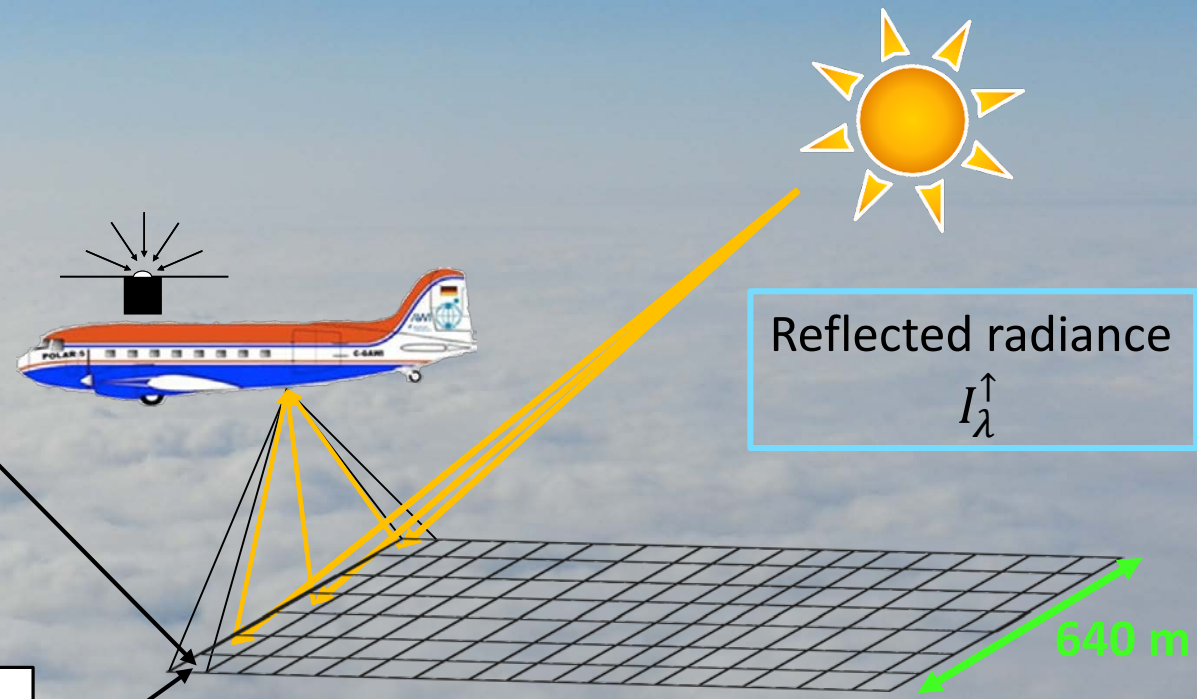

	Eagle	Hawk
FOV (˚)	37.7	35.5
Spatial pixels	1024	320
Spectral range (nm)	400 - 970	970 - 2450
FWHM (nm)	1.25	10
Spectral pixels	488	254

Products

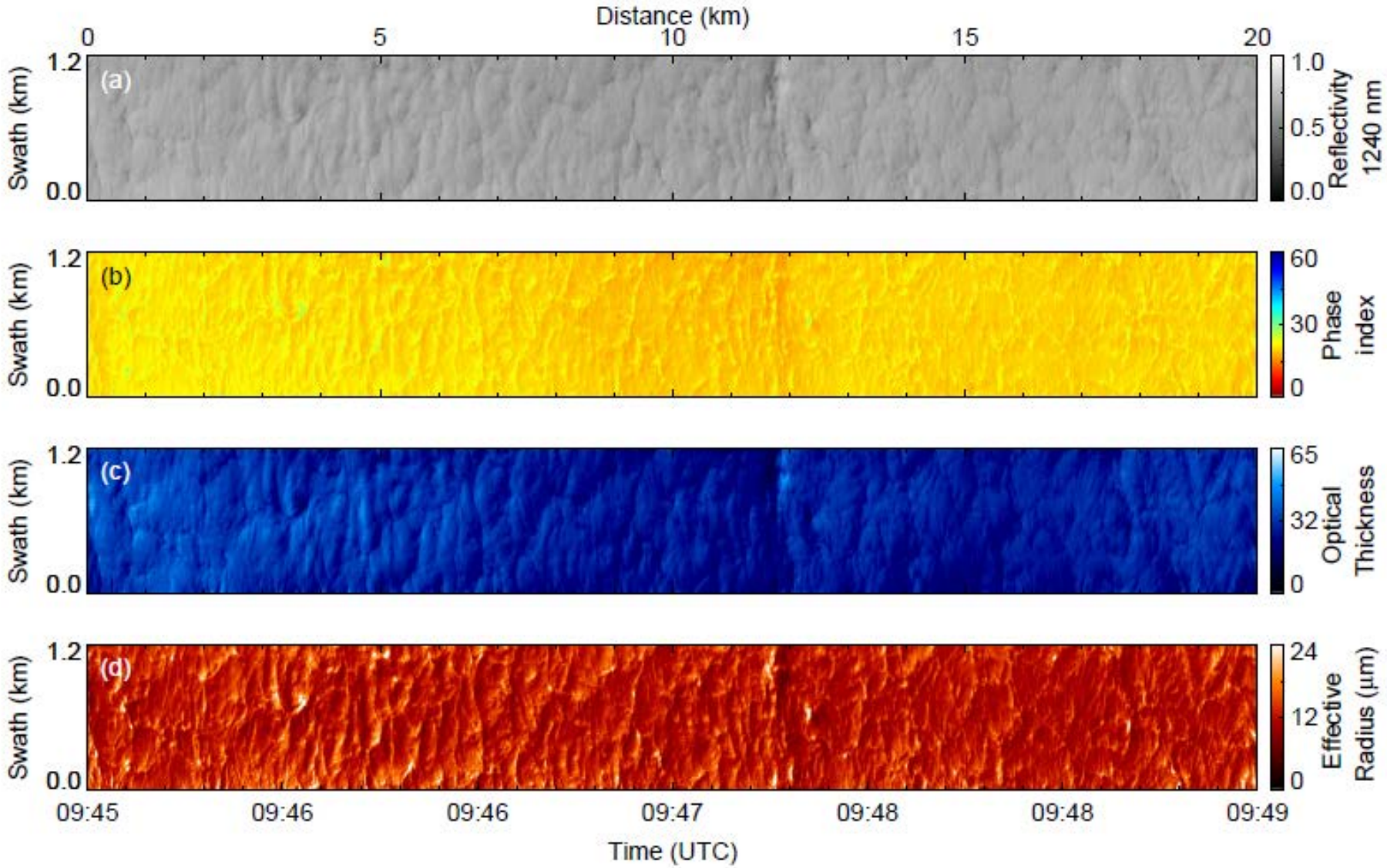
Distance (km)
0
5
10
15
20
Swath (km)
1.2
0.0
(a)
1.0
0.5
0.0
Reflectivity
1240 nm
(b)
60
30
0
Phase
index
(c)
65
32
0
Optical
Thickness
(d)
24
12
0
Effective
Radius (µm)
09:45
09:46
09:46
09:47
09:48
09:48
09:49
Time (UTC)

Products

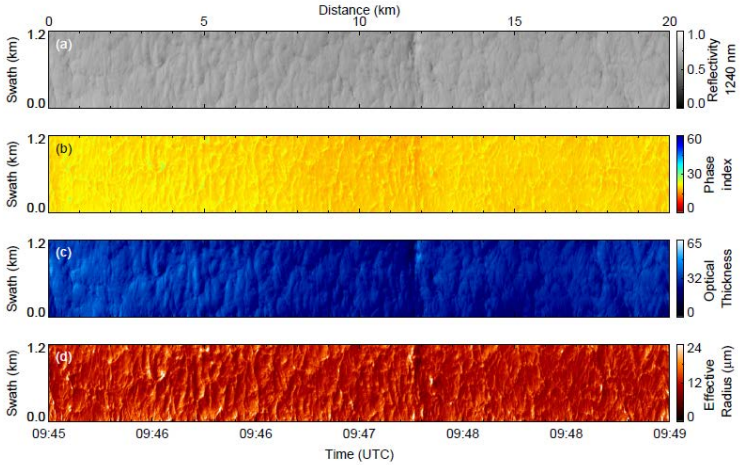
Distance (km)
0
5
10
15
20
Swath (km)
1.2
0.0
(a)
(b)
(c)
(d)
1.0
0.5
0.0
Reflectivity 1240 nm
60
30
0
Phase index
65
32
0
Optical Thickness
24
12
0
Effective Radius (µm)
09:45
09:46
09:46
09:47
09:48
09:48
09:49
Time (UTC)

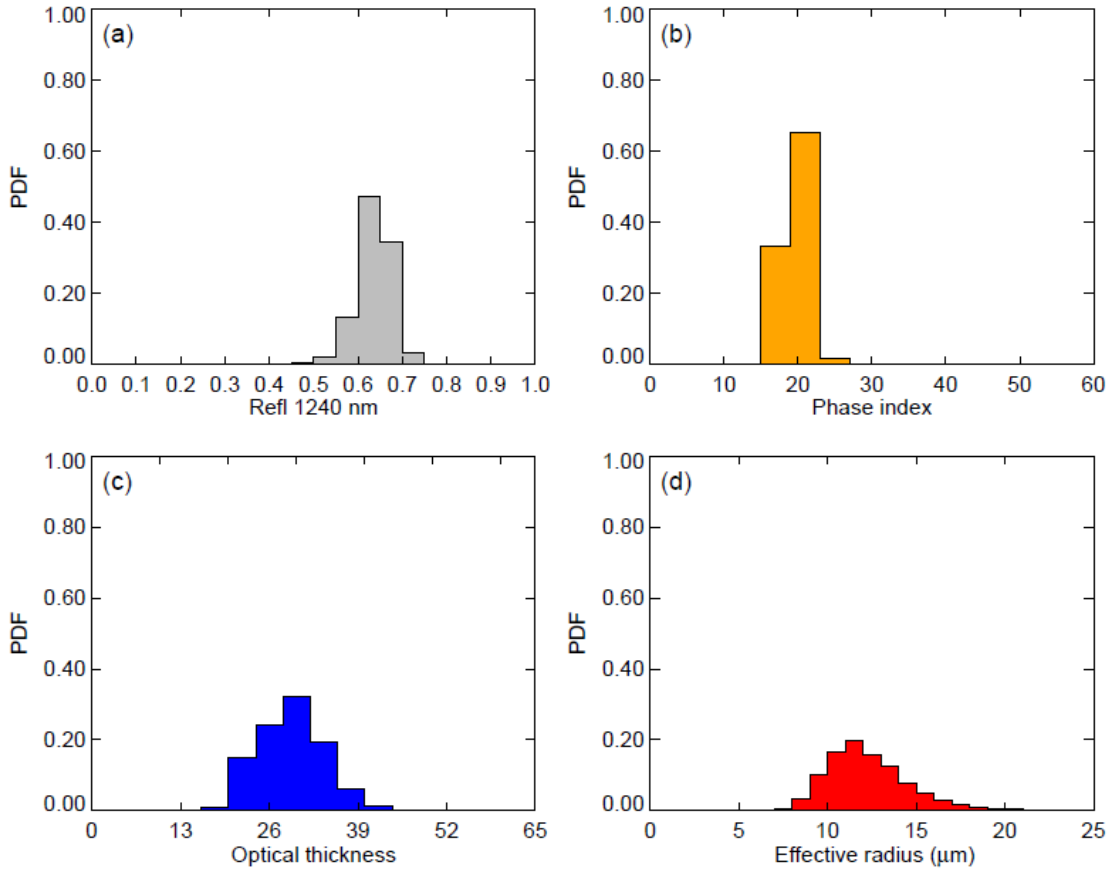
(a)
PDF
1.00
0.80
0.60
0.40
0.20
0.00
0.0 0.1 0.2 0.3 0.4 0.5 0.6 0.7 0.8 0.9 1.0
Refl 1240 nm
(b)
0 10 20 30 40 50 60
Phase index
(c)
0 13 26 39 52 65
Optical thickness
(d)
0 5 10 15 20 25
Effective radius (µm)